PART OF THE EAST 1/2 OF SEC. 21, T.6N., R.1W., S.L.B. & M.

OLD MILL PHASE 7

A CONDOMINIUM PROJECT

IN OGDEN CITY

TAXING UNIT: 25

SCALE 1"=10'

SURVEY PLAT: BOOK 29 OF DEDICATION PLATS PAGES 94~~&~~ & 95

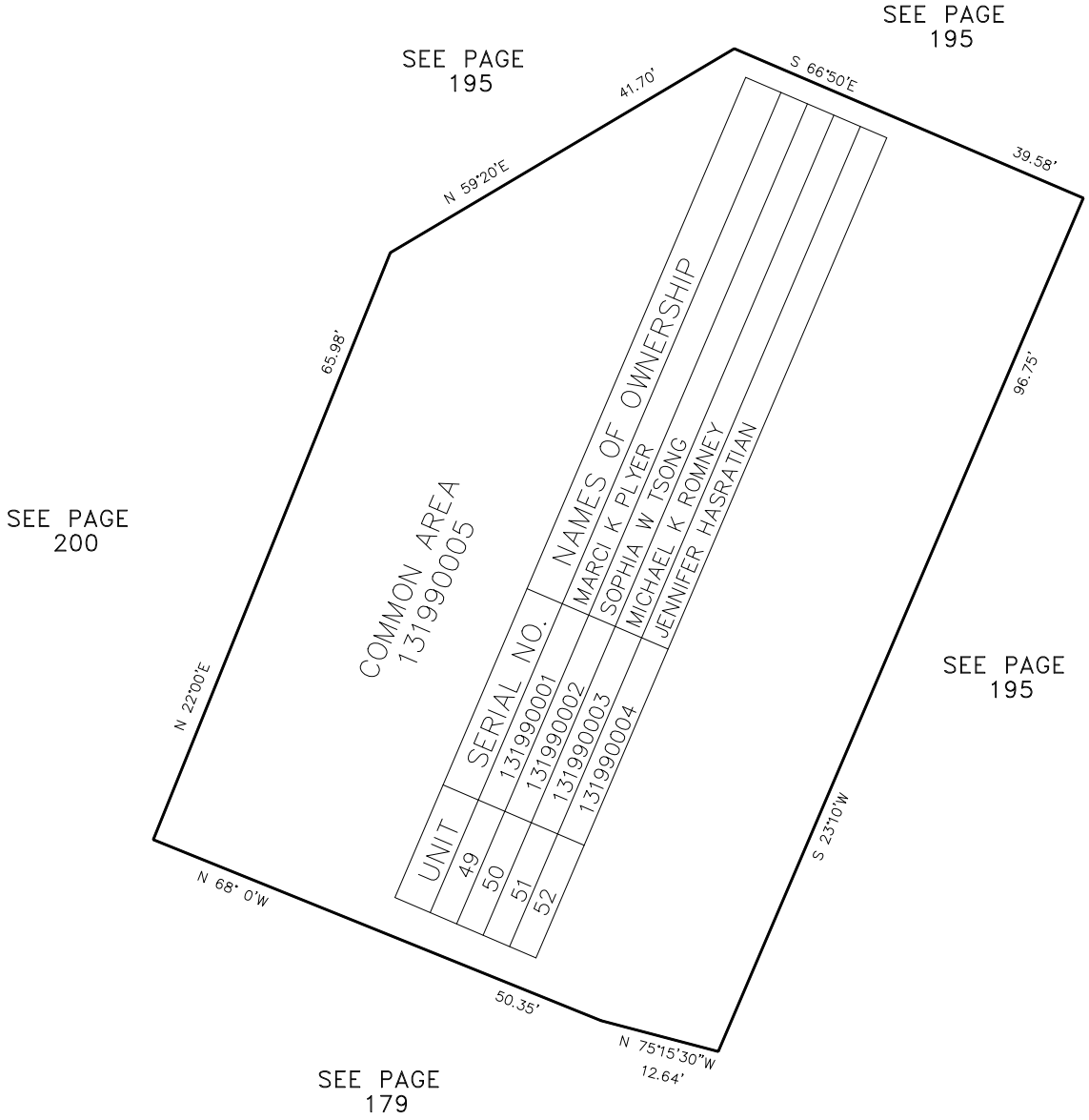

L.D.F. 12-87